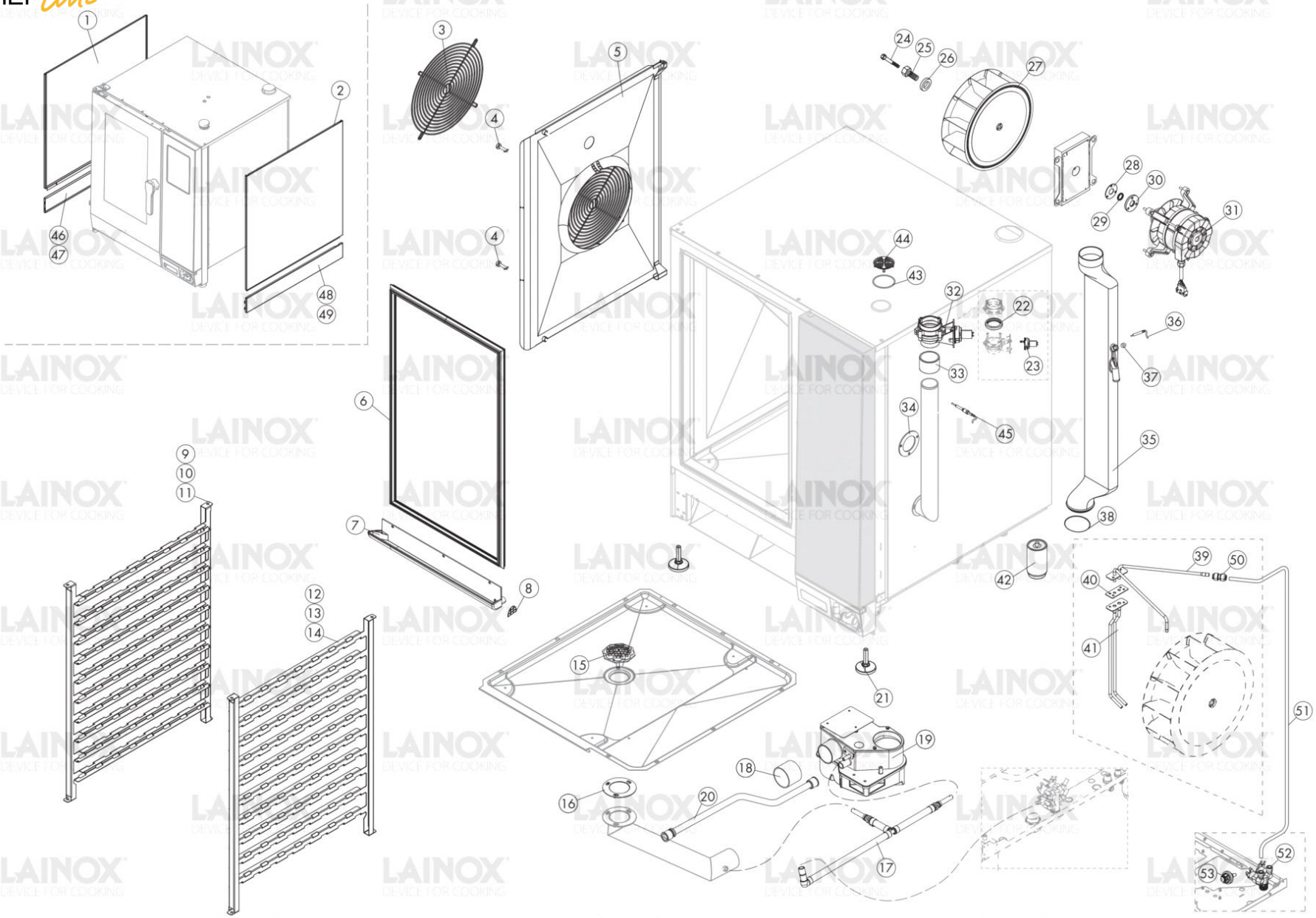

Warning! The exploded views refer to the general model

General

This document is the exclusive property of LAINOX ALI Group S.r.l. and must not be distributed, reproduced, in any other format without prior authorization from LAINOX ALI Group S.r.l. - Specifications subject to change without notice. Prices are valid at the date of issue of this document and may vary over time. To have prices always updated, consult the spare parts web portal.

Pos.	Code	Previous code	Description	Notes	From:	Up to:
0001	LA21400570		PANEL [C] SIDE B. 061			
0001	LA21400570VERN		SIDE BLACK N/S 061B	BLACK		
0002	LA21400570		PANEL [C] SIDE B. 061			
0002	LA21400570VERN		SIDE BLACK N/S 061B	BLACK		
0003	LA75300050		PLATE [C] FAN D. 270 N/S071 2014			
0004	LA58005740	LAR58005740	PIN [C] CHAMBER CLAMPING			
0004	LAR58007450		KIT FERMO INF.DEFLETTORE/PARATIE FILET.			
0004	LAR58007460		KIT FERMO SUP.DEFLETTORE/PARATIE FILET.			
0004	LAR58007490		BAFFLE PLATE FIXING PIN MARINE			
0005	LA21112810		BAFFLE PLATE N/S E061B MARINE	GN		
0005	LA21112830		BAFFLE PLATE ARE_054B MARINE	EN		
0006	LA70048142		OVEN DOOR GASKET [C] 495X460 MM			
0007	LAR21202900		DOOR TRAY HINGE R. N/S 61/101B			
0007	LAR69180720		FRONT TRAY HINGE L. N2/S2 61/101			
0008	LA69180250		FILTER [C] DRIP COLLECTOR DRAIN			
0009	LA21205170		RACK 5EN			
0009	LAR21202670		RACK 5EN NA/SA 061			
0010	LA21414930		RACK GN1/1 WIRE L. N/S 061B			
0011	LA21205160		RACK GN1/1 R. N/S 061B MARINE			
0011	LA21400630		RACK 6 LIV.GN1/1 B. 061			
0012	LA21205170		RACK 5EN			
0012	LA21406730		PARATIA 5 LIV.PASTICCERIA N2/S2 061@			
0013	LA21414920		RACK GN1/1 WIRE R. N/S 061B			
0014	LA21205160		RACK GN1/1 R. N/S 061B MARINE			
0014	LA21400630		RACK 6 LIV.GN1/1 B. 061			
0015	LA21101660		FILTER [C] DRAIN D.60 B.			
0016	LAR21115150		CABINET DRAIN			
0016	LAR70030190		GRAPHITE GASKETS KIT [C] 90x90x3 SET 5 PIECES			
0017	LA21222050		ASS.TUBI CONDENSAZ.101>161 GOM-T-UG-UG			
0017	LA70010490		SEAL O-RING 106 - min. 10 pcs or multiples			
0017	LAR21116260		KIT TUBI CONDEN.L230 GOM-Y-UG-UG NFS	UL Version		
0018	LA70060050		RUBBER SLEEVE [C] D. 60			
0019	LAR21100050		DRAIN BOX N/S B. 061/062/101/102			
0019	LAR21105740		DRAIN BOX UL N/S 06x/10xB	UL Version		
0020	LA21202950		FRONT TRAY PIPE HINGE R. N/S 61/101B			
0020	LA69180610		PIPE [C] DRIP TRAY GN1/1			

This document is the exclusive property of LAINOX ALI Group S.r.l. and must not be distributed, reproduced, in any other format without prior authorization from LAINOX ALI Group S.r.l. - Specifications subject to change without notice. Prices are valid at the date of issue of this document and may vary over time. To have prices always updated, consult the spare parts web portal.

Pos.	Code	Previous code	Description	Notes	From:	Up to:
0021	LA69070401		FRONT FOOT N/S 06xB/10xB			
0022	LA70030301		SEAL FASTDRY 2022			
0023	LAR65090510		GEARED MOTOR FASTDRY 2022			
0024	LA61020582		SCREW [C] TE A2 M6X60 UNI5737			
0025	LA58004000		SCREW [C] M12X1.5			
0026	LA58004010		WASHER [C] D. 30/12,5			
0027	LAR75401270		FAN [C] CHAMBER D. 240x120H 061 B.			
0028	LA21400101		COPERCHIO FLANGIA GUARN.MOTORE N2/S2'26			
0029	LA70700230		GUARNIZIONE ALBERO MOT.D17 PEEK			
0030	LA58007641		FLANGIA GUARNIZIONE MOTORE N5/S5			
0031	LAR65045070		MOTOR [C] FAN 750W B.			
0032	LA21108950		FASTDRY COMPLETE 2022			
0033	LA70060250		SLEEVE D1=50/D2=53,5 L50			
0034	LAR70030180		GRAPHITE GASKETS KIT [C] 80x50,3x3 SET 5 PIECES			
0035	LAR69180580		SAFETY VENT PIPE N2/S2 06x			
0036	LAR65320220		PROBE K L1,5M			
0037	LA65241050		SPACER [C] SILICON L=9.5 MM			
0038	LA70010470		GASKET [C] OR173 VITON FP75			
0039	LAR21200080		HUMIDIFIER CONNECTION PIPE N2/S2			
0040	LA70700110		GUARN.UMID/DET GRAF.ARM.70X32			
0041	LAR21201870		KIT HUMIDITY/WASHING PIPE B. 061/062			
0042	LA21205180		FLANGED FOOT H.105	Marine		
0042	LA69070380		FOOT [C] ADJ.13/4 A441 C/VITE M10x25 H105			
0043	LA70010850		SEAL OR 60 X 2,62			
0044	LAR69181180		LID FAST-DRY			
0045	LAR65320220		PROBE K L1,5M			
0046	LA21208390V		ASS.ZOCCOLO N2/S2 061/101 NERO 9005	BLACK		
0046	LA21411640		CLOSING L. N/S 061/101 ETL	UL Version		
0046	LAR21100281		PREM.ZOCCOLATURA C/CLIP N5/S5 061/101			
0047	LAR69110070		KIT PANELS MAGNETS N/S B.			
0048	LA21208390V		ASS.ZOCCOLO N2/S2 061/101 NERO 9005	BLACK		
0048	LA21411630		CLOSING R. N/S 061/101 ETL	UL Version		
0048	LAR21100281		PREM.ZOCCOLATURA C/CLIP N5/S5 061/101			
0049	LAR69110070		KIT PANELS MAGNETS N/S B.			
0050	LA62090908		CONNECTION [C] JG STRAIGHT F/F D.10			
0051	LA21221990		ASS.TUBO CALZA NER/GIA 8x12 L950 GOM-DR			

This document is the exclusive property of LAINOX ALI Group S.r.l. and must not be distributed, reproduced, in any other format without prior authorization from LAINOX ALI Group S.r.l. - Specifications subject to change without notice. Prices are valid at the date of issue of this document and may vary over time. To have prices always updated, consult the spare parts web portal.

Pos.	Code	Previous code	Description	Notes	From:	Up to:
0052	LAR65110340		SOLENOID VALVE [C] 2 WAYS 230V 50/60HZ OUT JG F D10			
0052	LAR65110780		SOLENOID VALVE [C] 230V50/60HZ	UL Version		
0053	LA14170880		PRE-A. WATER PRESSURE SWITCH			

This document is the exclusive property of LAINOX ALI Group S.r.l. and must not be distributed, reproduced, in any other format without prior authorization from LAINOX ALI Group S.r.l. - Specifications subject to change without notice. Prices are valid at the date of issue of this document and may vary over time. To have prices always updated, consult the spare parts web portal.

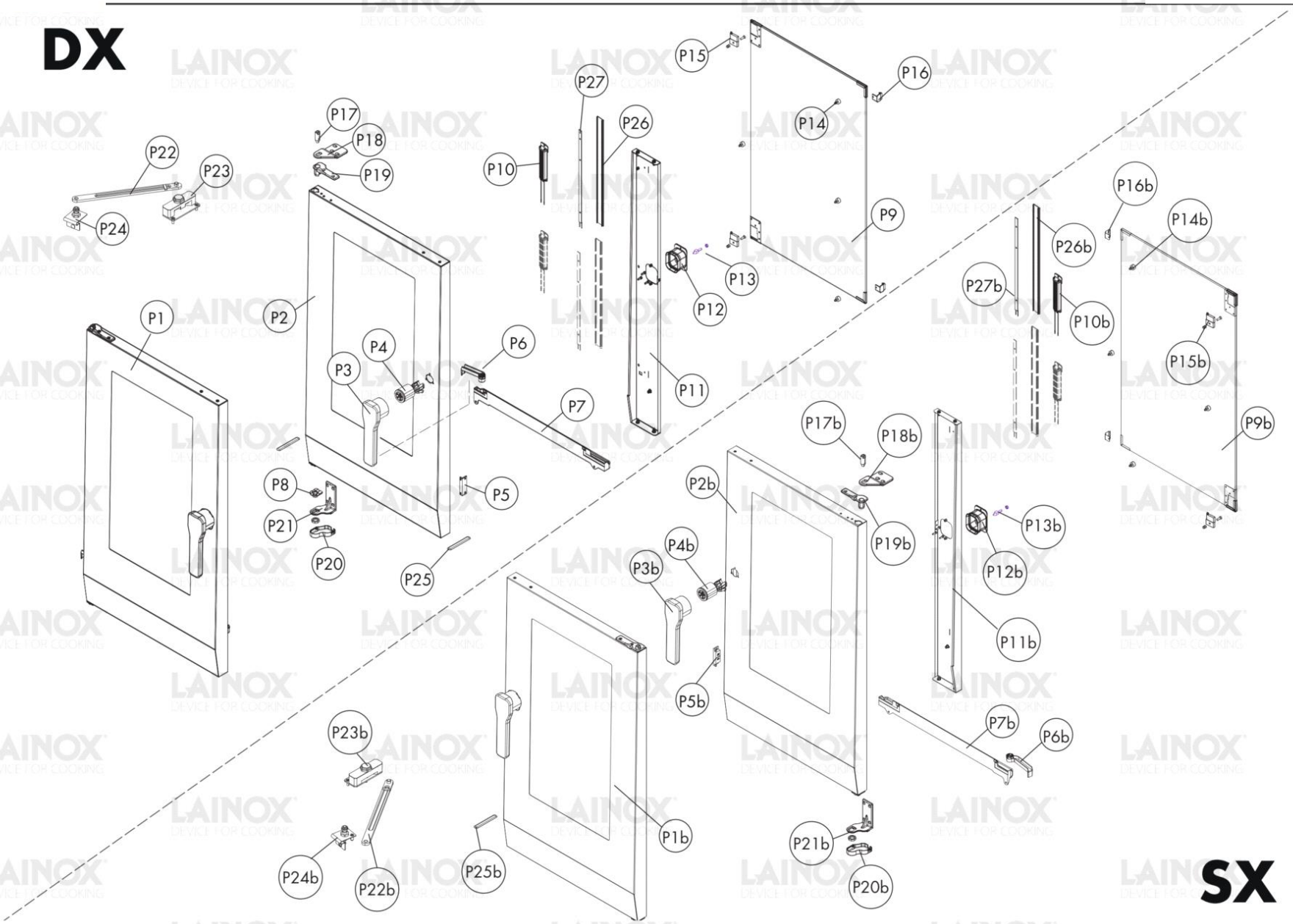

Warning! The exploded views refer to the general model

Door

This document is the exclusive property of LAINOX ALI Group S.r.l. and must not be distributed, reproduced, in any other format without prior authorization from LAINOX ALI Group S.r.l. - Specifications subject to change without notice. Prices are valid at the date of issue of this document and may vary over time. To have prices always updated, consult the spare parts web portal.

Pos.	Code	Previous code	Description	Notes	From:	Up to:
00P1	LA21110870V		COMPL DOOR BLACK LAINOX N5 061 SLS	SMART LIGHTING SYSTEM +BLACK		
00P1	LA21110880		COMPL DOOR LAINOX N5 061 SLS	SMART LIGHTING SYSTEM		
00P1	LA21111000		COMPL DOOR LAINOX N5 061			
00P1	LA21113230V		COMPL DOOR BLACK LAINOX N5 061	BLACK		
00P1	LA21113290		COMPL DOOR NEUTRAL N5 061			
00P1	LA21115200		COMPL DOOR NEUTRAL N5 061SLS	SMART LIGHTING SYSTEM		
00P2	LAR21201020		EXTERIOR DOOR LAINOX N/S 061B			
00P2	LAR21202390		EXTERIOR DOOR NEUTRAL N/S 061B			
00P2	LAR21207840		PORTA ESTERNA N2/S2 061 LAINOX NERO 9005	BLACK		
00P3	LA17110810		HANDLE LAINOX N2/S2/P			
00P3	LA69011260		HANDLE OEM NA/SA/SY			
00P4	LA69011021		LOCK [C] DOOR 2020			
00P5	LAR65265100		MICROSWITCH [C] DOOR			
00P6	LA69180731		DRAIN [C] DOOR DRIP TRAY B.			
00P7	LAR69180740		DOOR DRIP COLLECTOR B. 061/101			
00P8	LA58007700		PIN [C] LOWER DOOR HINGEB.			
00P9	LAR71203100		INNER GLASS DOOR N/S 061B			
0P11	LAR21201030		DOOR UPRIGHT R. INF. N/S 062/			
0P12	LA69011130		COVER [C] DOOR HOOK B.			
0P13	LA69010260		PRONG [C] 1 STEP			
0P13	LA69010521		NASELLO 2 STEP 6303/6334 N5/S5 2025	2 STEP		
0P14	LAR70050180		SPACER [C] GLASS PLATE 15X8 (min.10 pcs or multiples)			
0P15	LAR58001760K		DOOR GLASS HINGE			
0P16	LAR17406231		GLASS HOLDER (2x)			
0P17	LAR58007690		UPPER DOOR HINGE PIN N2/S2			
0P18	LA21400370		HINGE [C] DOOR UPPER B.			
0P18	LA21415090V		UPPER DOOR HINGE BLACK N2/S2	BLACK		
0P19	LAR21400390		DOOR TOP PLATE KIT N2/S2			
0P19	LAR21415100		DOOR TOP PLATE BLACK KIT N2/S2	BLACK		
0P1b	LA21112080		COMPL.DOOR HINGE R. LAINOX N5 061			
0P1b	LA21113200V		COMPL.DOOR HINGE R. BLACK N5 061 SLS	SMART LIGHTING SYSTEM +BLACK		
0P1b	LA21113960		COMPL.DOOR HINGE R. NEUTRAL N5 061			
0P1b	LA21116340		COMPL.DOOR HINGE R. LAINOX N5 061 SLS	SMART LIGHTING SYSTEM		
0P1b	LA21116660V		COMPL.DOOR HINGE R. BLACK N5 061	BLACK		
0P1b	LA21116670		COMPL.DOOR HINGE R. NEUTRAL N5 061SLS	SMART LIGHTING SYSTEM		

This document is the exclusive property of LAINOX ALI Group S.r.l. and must not be distributed, reproduced, in any other format without prior authorization from LAINOX ALI Group S.r.l. - Specifications subject to change without notice. Prices are valid at the date of issue of this document and may vary over time. To have prices always updated, consult the spare parts web portal.

Pos.	Code	Previous code	Description	Notes	From:	Up to:
0P20	LA69180710		COVER [C] HINGE B.			
0P21	LA21400360		HINGE [C] DOOR LOWER B.			
0P21	LA21415080V		LOWER DOOR HINGE BLACK N2/S2	BLACK		
0P22	LAR58008190		DOOR STOPPER KIT N2/S2 MARINE			
0P23	LAR58008200		KIT FERMO SUP.GUIDA SCORREV.PORTA N2/S2			
0P24	LAR58000640		DOOR STOPPER PIN N/S MARINE			
0P25	LA69181200		CLOSING			
0P26	LAR71210020		GLASS LED N2/S2 06x			
0P27	LA66115980		LIGHT WIRING N/S 06xB			
0P27	LA66117930		LIGHT WIRING SLS N5 06x/10xB	SMART LIGHTING SYSTEM		
0P27	LAR65270620		LAMP LED N5 SLS	SMART LIGHTING SYSTEM		
0P27	LAR65270640		LAMP LED N5			
0P2b	LAR21203420		EXT.DOOR HINGE R. NEUTRAL N/S 061B			
0P2b	LAR21203550		EXT.DOOR HINGE R. LAINOX N/S 061B			
0P2b	LAR21208140		EXT.DOOR HINGE R. BLACK N/S 061B	BLACK		
0P3b	LA17110810		HANDLE LAINOX N2/S2/P			
0P3b	LA69011260		HANDLE OEM NA/SA/SY			
0P4b	LA69011021		LOCK [C] DOOR 2020			
0P5b	LAR65265100		MICROSWITCH [C] DOOR			
0P6b	LA69180731		DRAIN [C] DOOR DRIP TRAY B.			
0P7b	LAR21202890		BACINELLA PORTA CONTR.N2/S2 061/101			
0P7b	LAR21208240		BACINELLA POR.CON.N2/S2 061/101 NERO9005	BLACK		
0P9b	LAR71203100A		INNER GLASS DOOR HINGE R. N/S 061B			
P11b	LAR21203400		UPRIGHT L. DOOR HINGE R. N/S061/062B			
P12b	LA69011130		COVER [C] DOOR HOOK B.			
P13b	LA69010260		PRONG [C] 1 STEP			
P13b	LA69010521		NASELLO 2 STEP 6303/6334 N5/S5 2025	2 STEP		
P14b	LAR70050180		SPACER [C] GLASS PLATE 15X8 (min.10 pcs or multiples)			
P15b	LAR58001760K		DOOR GLASS HINGE			
P16b	LAR17406231		GLASS HOLDER (2x)			
P17b	LAR58007690		UPPER DOOR HINGE PIN N2/S2			
P18b	LA21202920		R HINGE NA/SA			
P18b	LA21208180V		UPPER DOOR HING R. BLACK N2/S2	BLACK		
P19b	LAR21202910		KIT PIASTRA SUPERIORE PORTA CONTR.N2/S2			
P19b	LAR21208110		DOOR TOP PLATE HINGE R. BLACK KIT N2/S2	BLACK		
P20b	LA21407190		COPERTURA CERNIERA INF.PORTA CONTR.N2/S2			

This document is the exclusive property of LAINOX ALI Group S.r.l. and must not be distributed, reproduced, in any other format without prior authorization from LAINOX ALI Group S.r.l. - Specifications subject to change without notice. Prices are valid at the date of issue of this document and may vary over time. To have prices always updated, consult the spare parts web portal.

Pos.	Code	Previous code	Description	Notes	From:	Up to:
P20b	LA21415210V		COPER.CERNIERA INF.PORTA CONT.N2/S2 9005	BLACK		
P21b	LA21204060		R HINGE NA/SA			
P21b	LA21208170V		LOWER DOOR HINGE R. BLACK N2/S2	BLACK		
P22b	LAR58008190		DOOR STOPPER KIT N2/S2 MARINE			
P23b	LAR58008200		KIT FERMO SUP.GUIDA SCORREV.PORTA N2/S2			
P24b	LAR58000640		DOOR STOPPER PIN N/S MARINE			
P25b	LA69181200		CLOSING			
P26b	LAR71210020		GLASS LED N2/S2 06x			
P27b	LA66115980		LIGHT WIRING N/S 06xB			
P27b	LA66117930		LIGHT WIRING SLS N5 06x/10xB	SMART LIGHTING SYSTEM		
P27b	LAR65270620		LAMP LED N5 SLS	SMART LIGHTING SYSTEM		
P27b	LAR65270640		LAMP LED N5			

This document is the exclusive property of LAINOX ALI Group S.r.l. and must not be distributed, reproduced, in any other format without prior authorization from LAINOX ALI Group S.r.l. - Specifications subject to change without notice. Prices are valid at the date of issue of this document and may vary over time. To have prices always updated, consult the spare parts web portal.

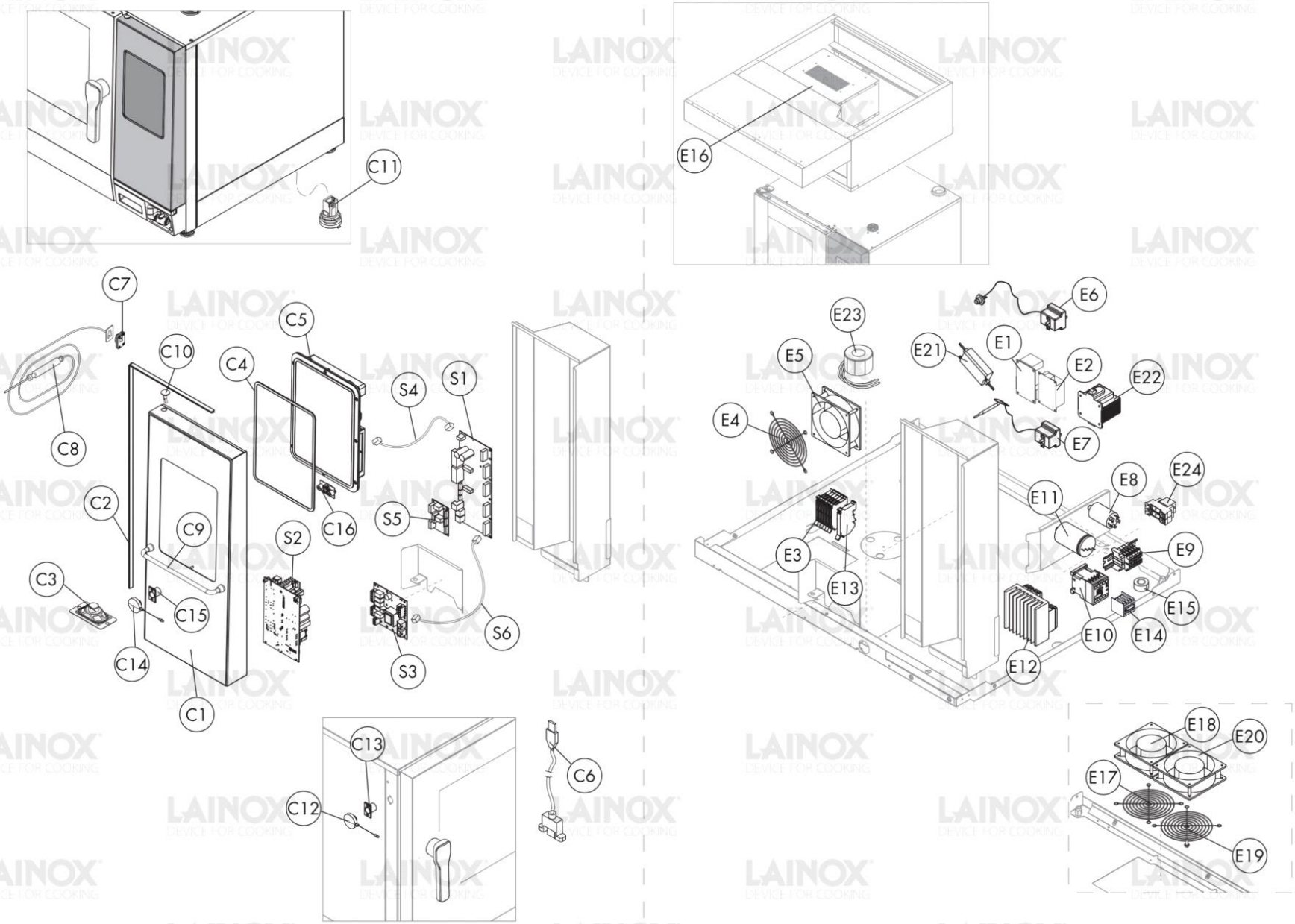

Warning! The exploded views refer to the general model

Control panel

This document is the exclusive property of LAINOX ALI Group S.r.l. and must not be distributed, reproduced, in any other format without prior authorization from LAINOX ALI Group S.r.l. - Specifications subject to change without notice. Prices are valid at the date of issue of this document and may vary over time. To have prices always updated, consult the spare parts web portal.

Pos.	Code	Previous code	Description	Notes	From:	Up to:
00C1	LAR21111360AR		ASS.CRUSCOTTO N5 AR_N054B AROMA			
00C1	LAR21116730AR		ASS.CRUSCOTTO N5 AR_N054B AROMA NERO9005	BLACK		
00C2	LAR80100101		PROFILE 5M			
00C3	LA65330090		LOUDSPEAKER 4 OHM			
00C4	LA70700030		DISPLAY SEAL NABOO 2023			
00C5	LAR65303960		BOARD DISPLAY 10 NABOO 5.0			
00C5	LAR65303970		BOARD DISPLAY 10 NABOO 5.0 +ETH			
00C6	LA65302600		CABLE [C] BOARD/USB OUTLET L. 850			
00C7	LAR58007600		CORE PROBE PASS-THROUGH N2/S2			
00C8	LA65321501		CORE PROBE W. CONNECTOR K4P	CONN.EXT.		
00C8	LAR65321490		KIT CORE PROBE 4P. 6PIN. IMP.2020			
00C8	LAR69040200		KIT CLIP FERMACAVO N2/S2			
00C9	LAR14445350		DISPLAY SAFETY GUARD			
00E1	LA65303911		SCHEDA ESPANSIONE FD-FLX BUS LNX 3CH			
00E2	LA65187310		POWER SUPPLY 15V 3A ORAC.B			
00E3	LA65210020		FUSE HOLDER [C] 5X20			
00E4	LA75300020		GRID [C] FAN			
00E5	LA65060050		FAN [C] D. 120			
00E6	LA65070350		THERMOSTAT [C] 360°C N/S/L			
00E6	LA65070370		SAFETY THERMOSTAT 360°C UL	UL Version		
00E6	LA70700210		SEAL F2			
00E7	LA65070380		SAFETY THERMOSTAT 150°C UL	UL Version		
00E7	LAR65070081		THERMOSTAT [C] BOILER N/S/L			
00E8	LA65280240		FILTER [C] ELECTROMECHANICAL			
00E9	LA65220091		TERMINAL BLOCK [C] 3P+N+G			
00S1	LA65303921		MAIN BOARD NABOO 5.0 2023			
00S2	LA65141140		INVERTER BRUSHL.500W IGBT+PFC+TROPIC.ED.			
00S3	LA65303930		BOAD EXP. BOILER NABOO 5.0 2023			
00S4	LA65301750		CABLE [C] SERIAL RJ45 L. 600			
00S5	LA65303090		BOARD [C] EXP. SSR NABOO B.			
00S6	LA65301740		CABLE [C] SERIAL RJ45 L. 250			
0C10	LA69130670		CAP [C] D.12			
0C11	LAR65303070		PLUG [C] ETHERNET F/F	OPTIONAL		
0C12	LA65321391		PLUG N/S 2020	CONN.EXT.		
0C13	LA65321540		CORE PROBE CONNECTOR	CONN.EXT.		
0C14	LA65321391		PLUG N/S 2020	CONN.EXT.		

This document is the exclusive property of LAINOX ALI Group S.r.l. and must not be distributed, reproduced, in any other format without prior authorization from LAINOX ALI Group S.r.l. - Specifications subject to change without notice. Prices are valid at the date of issue of this document and may vary over time. To have prices always updated, consult the spare parts web portal.

Pos.	Code	Previous code	Description	Notes	From:	Up to:
0C15	LA65321540		CORE PROBE CONNECTOR	CONN.EXT.		
0E10	LA65140900		CONTACTOR [C] 3RT2016-1AP02			
0E10	LA65140910		CONTACTOR [C]	UL Version		
0E10	LA65210110		FUSE HOLDER BCC3X38	UL Version		
0E11	LA65280270		FILTER [C] FLCP566000 3,3ÂµF 0,22nF 1W 475VAC			
0E12	LAR65170240		KIT 2xSSR HEATEXC. CABLING	WITH BOILER		
0E12	LAR65170250		KIT 1xSSR HEATEXC. CABLING	WITHOUT BOILER		
0E13	LA65210050		FUSE HOLDER [C] 6,3X32			
0E14	LA65140940		CONTACT	UL Version		
0E14	LA65141060		CONTACTOR [C] AUX. 2NO+2NC 3RH2911-1HA22			
0E15	LA65280490		FERRITE [C] TOROIDAL FT36			
0E16	LA65060650		VENTIL.CAPPA 250MM RH22V-4IP.ZC.AR 11787	LCH3		
0E16	LA65060660		MOTOVENT.ROT.EST.C/COCLEA A304 YMV0010	BKC011/BKC011S		
0E16	LA65060690		VENT.RAD.C/INVOL.HAR_MV2 117W 230V 50/60	BKC011F		
0E16	LA65600321		CASSETTA COMPL.CABL+CONN.CAPPA“N-X”SOVR.	BKC011S		
0E16	LA65600341		HOOD X ELECTTRICAL BOX H200	BKC011F/BKC011		
0E17	LA75300020		GRID [C] FAN			
0E18	LA65060050		FAN [C] D. 120			
0E19	LA75300020		GRID [C] FAN			
0E20	LA65060050		FAN [C] D. 120			
0E22	LA65187110		TRANSFORMER [C] 40VA 2.5/12/24V	UL Version		5/3/2024
0E23	LAR65187350		AUTOTRANSFORMER 1800VA 400/440/480V			
0E24	LAR65170050		RELAY 240V 8/5 A	NPK/BPK/SN		

This document is the exclusive property of LAINOX ALI Group S.r.l. and must not be distributed, reproduced, in any other format without prior authorization from LAINOX ALI Group S.r.l. - Specifications subject to change without notice. Prices are valid at the date of issue of this document and may vary over time. To have prices always updated, consult the spare parts web portal.

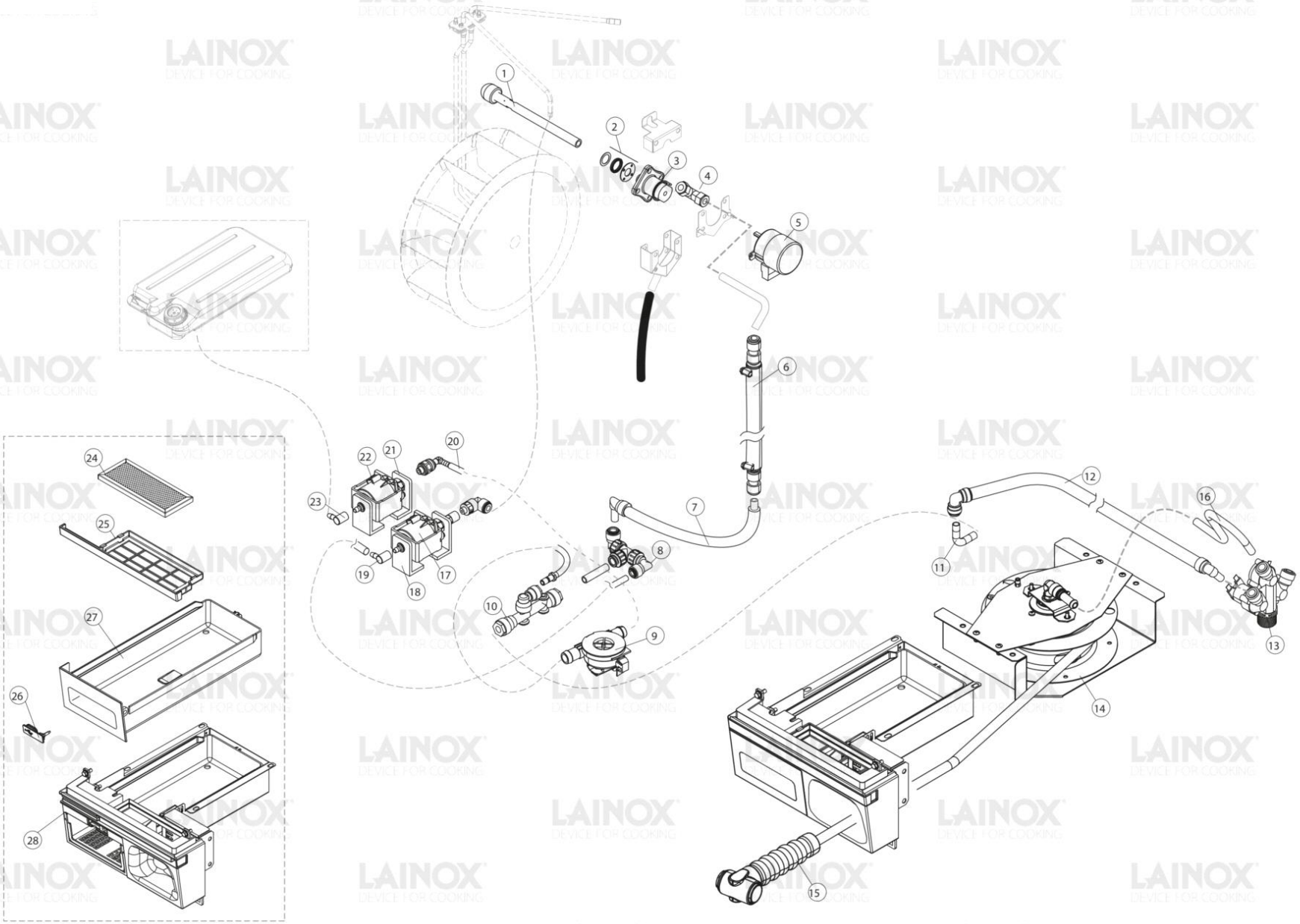

Warning! The exploded views refer to the general model

Washing

This document is the exclusive property of LAINOX ALI Group S.r.l. and must not be distributed, reproduced, in any other format without prior authorization from LAINOX ALI Group S.r.l. - Specifications subject to change without notice. Prices are valid at the date of issue of this document and may vary over time. To have prices always updated, consult the spare parts web portal.

Pos.	Code	Previous code	Description	Notes	From:	Up to:
0001	LAR58007080		WASHING HEAD [C] L=160 (1/1)			
0002	LA70700190		GUARN.GRAF.ARM.ØE59 ØI25			
0002	LAR70045120		GASKET [C] MOB WASHING			
0003	LAR58007020		FLANGE [C] MOB WASHING			
0004	LA62090663		CONNECTION [C] 90° D.10-1/4			
0005	LAR65090260		GEARED MOTOR WASHING			
0006	LA21108340		TUBE BLUE D13x23 L500			
0007	LA21222130		ASS.TUBO CALZA NER/ROS 8x12 L450 DR-DR			
0008	LA62090468		CONNECTION [C] T F/F/F JG D.10			
0008	LAR21115050		WASHING PIPE N2/S2			
0009	LA66142170		CABLAGGIO FLUSSIMETRO GICAR N5 PAVIMENTO		6/30/2025	
0009	LA74200210		FLUSS.FMPL-HBP OCCHIEL.POS.0° C/OR VITON		6/30/2025	
0009	LAR21115070		FLOW METER N2/S2			6/27/2025
0010	LA62090888		CONNECTION [C] JG 3WAY WASHING			
0012	LA21222220		ASS.TUBO CALZA NER/ROS 8x12 L500 GOM-DR			
0013	LAR65110360		SOLENOID VALVE [C] 3 WAYS 230V 50/60HZ OUT JG F D10			
0013	LAR65110790		SOLENOID VALVE [C] 230V 50/60HZ	UL Version		
0014	LA62200180		ROLLGUIDE [C] B.			
0015	LA62200220		HANDLE[C] SHOWER			
0016	LA21222210		ASS.TUBO CALZA NER/ROS 8x12 L190 GOM-GOM			
0016	LA62090458		CONNECTION [C] JG STRAIGHT F/F D.10			
0017	LAR65110600		PUMP [C] PULSE BIG 230V 50/60HZ			
0018	LA65110610		HOLDER [C] PUMP			
0019	LA62090980		CONNECTION [C] POMPA 90°			
0019	LAR21115050		WASHING PIPE N2/S2			
0020	LAR21115060		WASHING PIPE N2/S2			
0021	LA65110610		HOLDER [C] PUMP			
0022	LAR65110600		PUMP [C] PULSE BIG 230V 50/60HZ			
0023	LA62090980		CONNECTION [C] POMPA 90°			
0024	LA21400160		FILTER [C] AIR B.			
0025	LA69180681		HOUSING [C] AIR FILTER B.			
0026	LA70050240		CAP [C] USB SOCKET SYLICON B.			
0027	LAR69180700		DRAWER SMOKEGRILL NA/SA			
0028	LA21100100		PRE-A. UNDERDASHBOARD B.			

This document is the exclusive property of LAINOX ALI Group S.r.l. and must not be distributed, reproduced, in any other format without prior authorization from LAINOX ALI Group S.r.l. - Specifications subject to change without notice. Prices are valid at the date of issue of this document and may vary over time. To have prices always updated, consult the spare parts web portal.

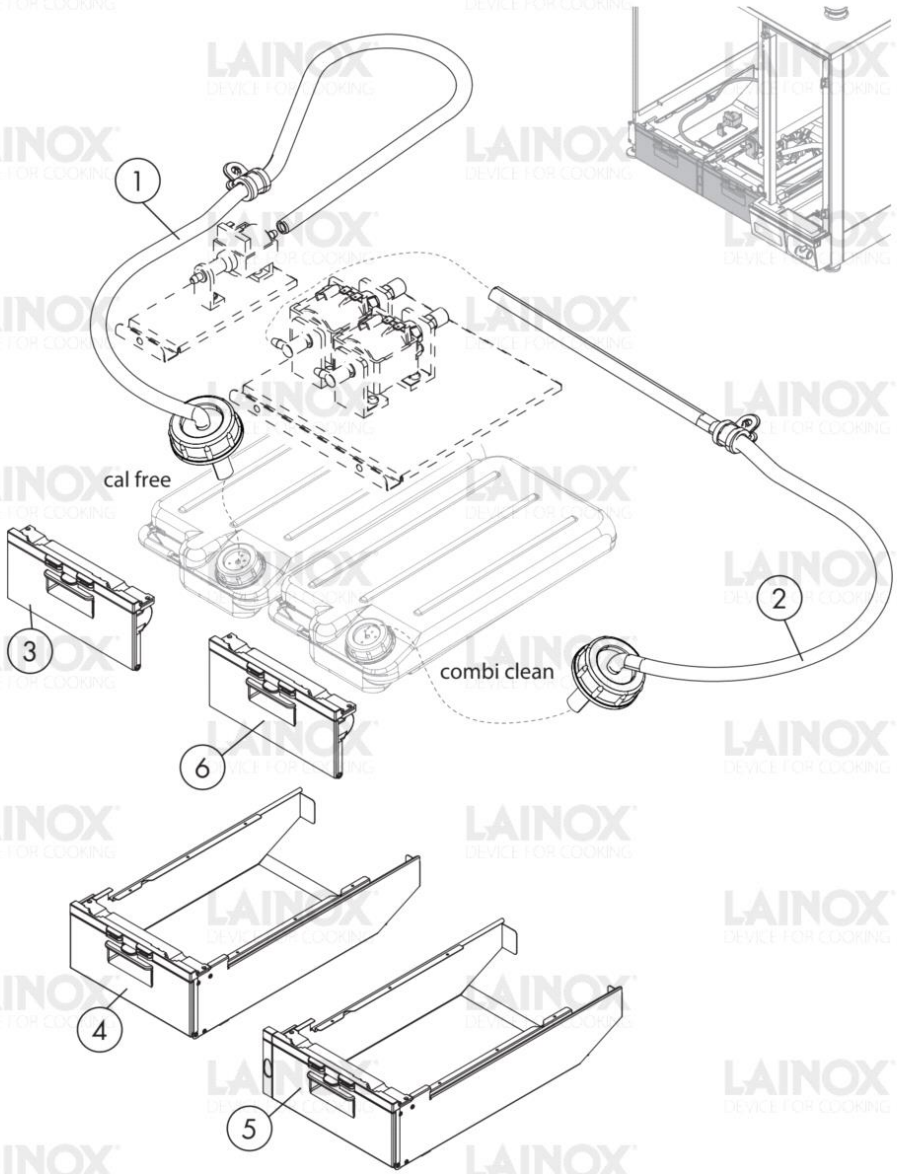

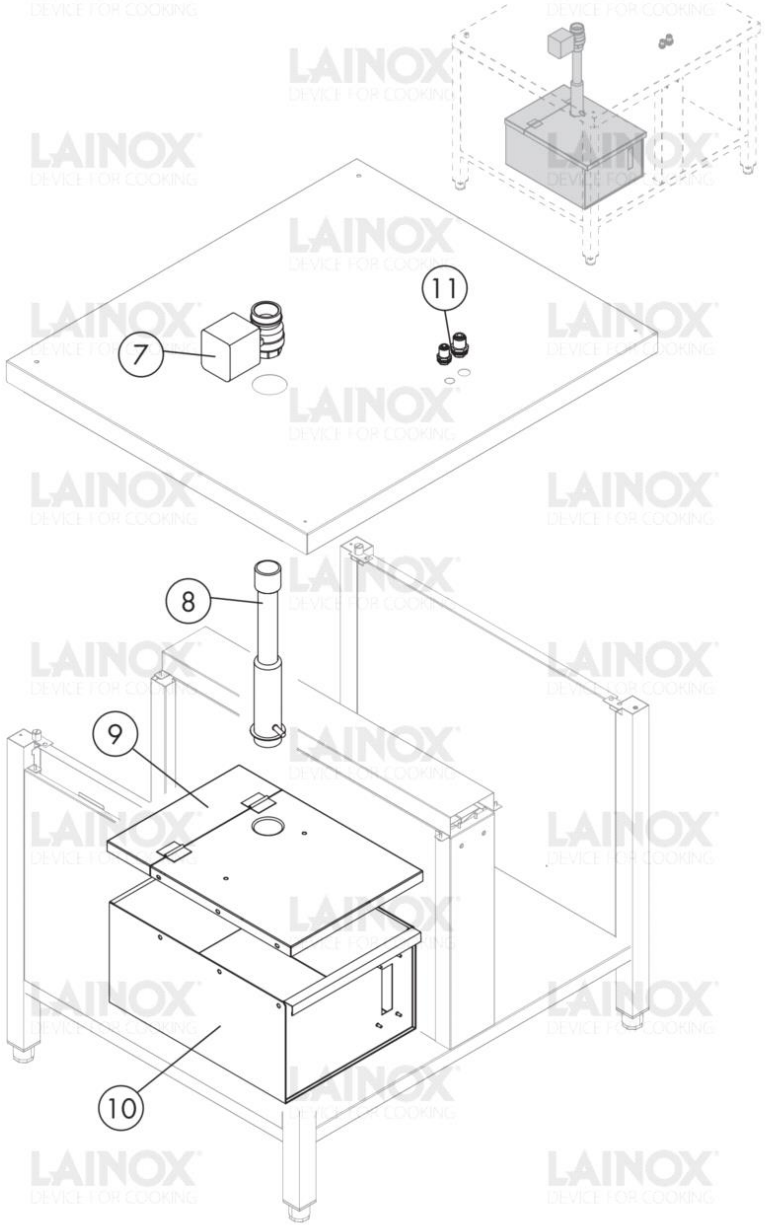

Warning! The exploded views refer to the general model

Tanks

This document is the exclusive property of LAINOX ALI Group S.r.l. and must not be distributed, reproduced, in any other format without prior authorization from LAINOX ALI Group S.r.l. - Specifications subject to change without notice. Prices are valid at the date of issue of this document and may vary over time. To have prices always updated, consult the spare parts web portal.

Pos.	Code	Previous code	Description	Notes	From:	Up to:
0001	LA21100012		PREM.TUBO DEC.TAN.ANTIR.N2/S2 C/ANTIRIT.			
0001	LA65110910		ANTI-RETURN ASS.			
0002	LA21100002		PREM.TUBO DET.TAN.ANTIR.N2/S2 C/ANTIRIT.			
0002	LA65110910		ANTI-RETURN ASS.			
0003	LAR69180870		TANK DOOR N2/S2			
0004	LA21101520		PRE-A. TANK HOLDER B.			
0005	LA21101510		PRE-A. TANK HOLDER W. PROBE B.			
0006	LAR69180870		TANK DOOR N2/S2			

This document is the exclusive property of LAINOX ALI Group S.r.l. and must not be distributed, reproduced, in any other format without prior authorization from LAINOX ALI Group S.r.l. - Specifications subject to change without notice. Prices are valid at the date of issue of this document and may vary over time. To have prices always updated, consult the spare parts web portal.

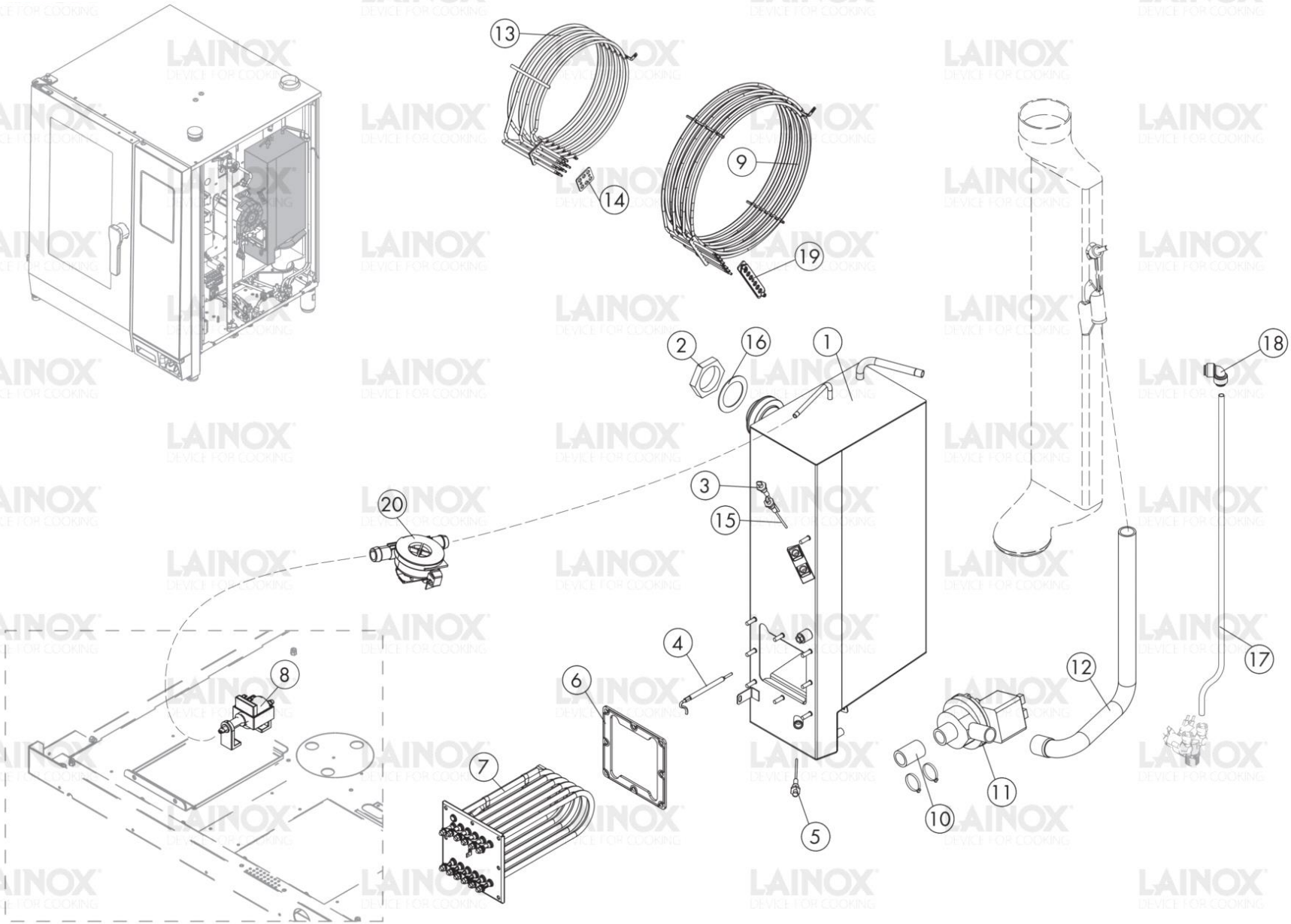

Warning! The exploded views refer to the general model

Heating

This document is the exclusive property of LAINOX ALI Group S.r.l. and must not be distributed, reproduced, in any other format without prior authorization from LAINOX ALI Group S.r.l. - Specifications subject to change without notice. Prices are valid at the date of issue of this document and may vary over time. To have prices always updated, consult the spare parts web portal.

Pos.	Code	Previous code	Description	Notes	From:	Up to:
0013	LAR65012292		HEATING ELEMENT [C] CHAMBER 11000W230V			
0013	LAR65012322		CABINET HEATING EL. N2/S2 11KW 208V	UL Version 208V (USA-CAN)		
0013	LAR65012362		CABINET HEATING EL. N2/S2 11KW 254V	Marine Version 254V		
0013	LAR65012402		CABINET HEATING EL. N2/S2 11KW 277V	UL Version 277V (USA-CAN 3AC 480V)		
0013	LAR65012462		CABINET HEATING EL. N2/S2 11KW 240V	UL Version 240V (USA-CAN)		
0014	LA21400850		FLANGE 56x50x3			
0014	LA70030250		GASKET [C] GRAPHITE HEATING ELEMENTS 56x50x3			

This document is the exclusive property of LAINOX ALI Group S.r.l. and must not be distributed, reproduced, in any other format without prior authorization from LAINOX ALI Group S.r.l. - Specifications subject to change without notice. Prices are valid at the date of issue of this document and may vary over time. To have prices always updated, consult the spare parts web portal.